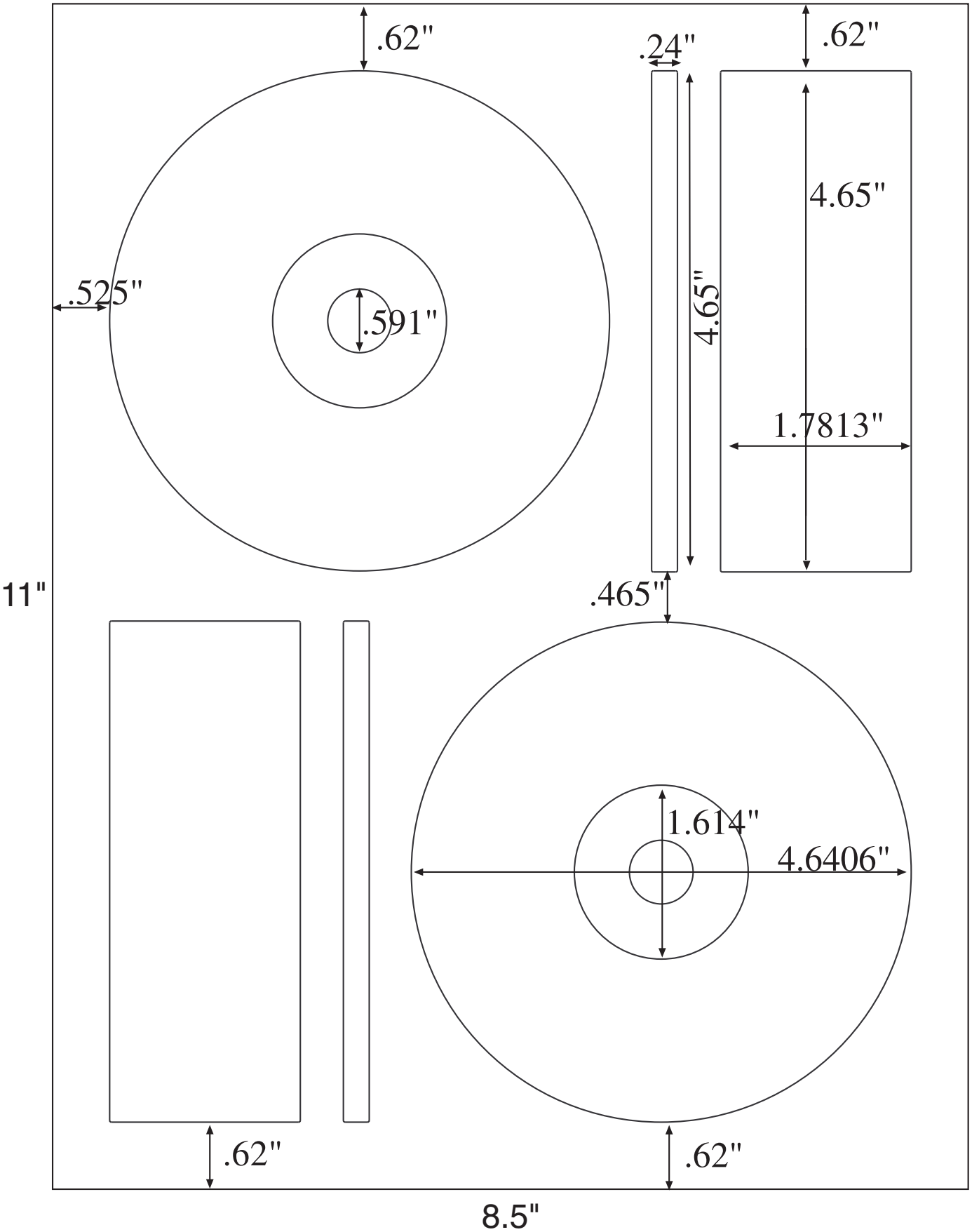A to Z Audio Stock# 61300